DOUBLE PISTON ROTARY ACTUATORS

TYPE SAD (DOUBLE-ACTING)

STANDARD VERSION
HIGH PERFORMANCE VERSION (HP)

TYPE SAF (SINGLE-ACTING)

STANDARD VERSION
HIGH PERFORMANCE VERSION (HP)

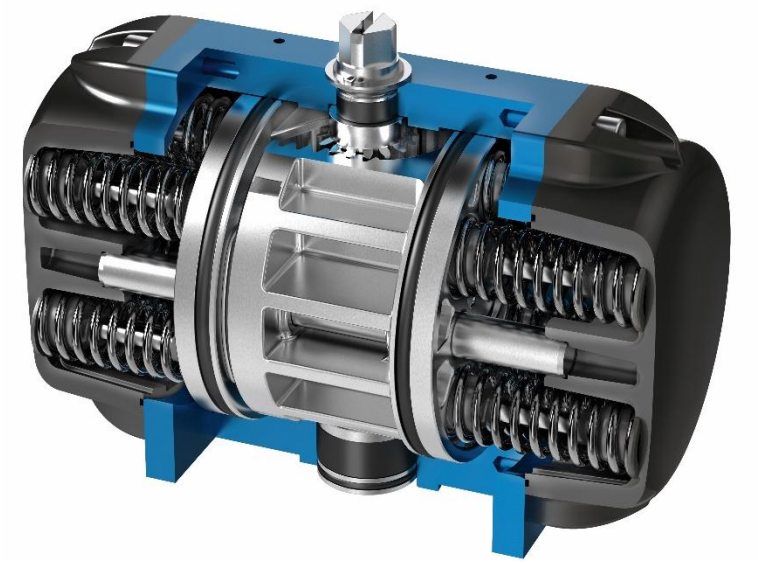

Contents

1. General 2
2. Safety instructions 3
3. Scope of application 4
4. Intended use 4
5. Technical data 5
6. Marking DIR 2014/34/EU + EAC 9
7. Design 11
8. Storage 23
9. Transport 25
10. Assembly 26
11. Commissioning 31
12. Maintenance / service life 32
13. SIS (**S**afety **I**nstrumented **S**ystem) 33
14. Faults 36
15. Disposal 37

1. General

- These instructions contain important information on installing, maintaining and operating the drives safely and properly.
- Observing them helps avoid dangers, reduce repair costs and downtimes and increase the reliability and service life of the drives.
- The instructions must be read and used by everyone who is entrusted with working on the drives.
- The instructions must be available at all times. Always keep a copy of these instructions at the location where the drives are used. Before you start to carry out assembly or maintenance work, you must read through the instructions in full beforehand. If in doubt, contact AMG-Pesch.
- We reserve the right to make technical changes and additions to the instructions.
- Responsibility
  - Manufacturer
    - Safe design/drive layout
    - Forwarding of all necessary documents, information, certificates
    - Compliance with all regulations, guidelines
  - Operators
    - Forwarding of all documents, information and certificates supplied / required by AMG-Pesch to the system operator / operating personnel
- Notes
  - In the following instructions, the valve / drive / accessory unit is referred to as the "actuator".
  - In addition to these instructions, all manufacturer documents (connection diagrams, etc.) for additional modules must be observed; any missing documents must be requested.
  - The type designation SAD-HP / SAF-HP describes the high-performance version of the standard SAD / SAF drives

2. Safety instructions

- The basic requirement for safe handling and trouble-free operation of the drives is knowledge of the safety instructions in this manual.

- During all work, the company safety regulations, environmental regulations and accident prevention regulations must be observed.
- When handling oils, grease and other chemical substances, the applicable safety regulations must be observed.
- Used lubricants are to be disposed of properly and in an environmentally friendly manner. National regulations must be observed.
- The drives may only be operated if they are in perfect working order.
- Use outside the parameters specified in *section 5. Technical data* and *section 4. Intended use* are not permitted.
- The drives may only be operated with the control pressure specified on the nameplate, see *section 5.2. Nameplate.*
- The safety devices in the system for limiting the control pressure are to be checked regularly for their functionality.
- Additional documents from the drive manufacturer / the manufacturer of the attached components must be observed.
- All work may only be carried out by specialists from AMG-Pesch or appropriately trained personnel.
- All work on the drive and the associated attachments may only be carried out in the dismantled / de-pressurized / vented / de-energized state.

- Drives with explosion protection are marked in accordance with *section 6. Marking DIR 2014 / 34 / EU + EAC (TP TC 012/2011)*.
- The drives with labelling according to DIR 2014 / 34 / EU may be operated as Ex devices under the following atmospheric conditions (DIN EN IEC 60079-0):
-20°C to +60°C

- The temperature of the compressed air supplied must not exceed 45 ° C.
- Filter the control medium with a mesh size of at least 40 µm (ISO 8573-1, class 5).
- Appropriate measures must be taken for applications ≤ 0 ° C.
- Replacement of spare parts **only** with original parts from AMG-Pesch.
- In the case of single-acting drives, disassemble only in the safety position. (see *section 7.2.2. SAF / SAF-HP (single-acting),* spring released = safety position)
- With single-acting drives, it must be ensured that no moisture or corrosive media can penetrate into the outer chamber through the pneumatic connection (see *section 7.5.1. Air supply)*. (e.g. through filters, silencers)
  → Risk of spring breakage
- The pinions of the standard drives are not suitable for absorbing external transverse forces.
- The drives cannot absorb any permanent torsional vibrations in the end positions.
- The locking ring must be checked prior to functional tests with the control medium; see *section 7.4. Exploded view* / item 403 → The pinion can be pushed out of the housing if the circlip is missing / defective
  → Risk of injury

- The system operator must take measures to exclude hazards.

- Warning notices in the area of rotating parts (e.g. interface between valve and drive).

- Warning notices regarding heavy parts.

- Work in danger areas may only be carried out under the supervision of a second person.
- All work may only be carried out by qualified persons.

- Work on electrical systems may only be carried out by trained personnel.
- Electric circuits must be protected against overvoltage.
- Observe the system operator's safety regulations.
- Ensuring the voltage-free condition by a qualified electrician.

  - Procedure

Activation of the system parts
Remove fuses
Attach prohibition signs

Protection against switching on again → Check that there is no voltage

Earth plant parts

3. Scope of application

- These instructions apply to AMG double-piston rotary actuators SAD / SAD-HP (double-acting) and SAF / SAF-HP (single-acting, with spring return) of sizes 05-50.

4. Intended use

- The pneumatic AMG double-piston rotary actuators are used to automate valves with a rotary movement of ≤ 180 °.
- Use outside the parameters specified in *section 5. Technical data* is not permitted.

- SIS for SAD / SAF (does **not** apply to HP version)
  - The drives are suitable for use in a safety-related system (SIS) up to SIL 2 (Low Demand Mode) according to IEC 61508. Taking into account the minimum required hardware fault tolerance of HFT = 1, the drives in redundant design can also be used up to SIL 3 according to IEC 61508 and IEC 61511.

5. Technical data

5.1. Application limits

- Ambient temperature
  - SAD / SAF
    - -25°C to +80°C
  - SAD / SAF High temperature-version
    - -20°C to +120°C (SPECIAL up to 160°C)
  - SAD-HP / SAF-HP
    - -20°C to +100°C
- Pressure
  - Control pressure min.: Standard = 2bar → for actuators according to the design conditions
  - Control pressure max.: 8bar → Specification of maximum control pressure per nameplate
  - Drive housing static pressure max.10bar.
- Torque range
  - see "Technical data sheets"
- Switching time
  - see "Technical data sheets"; shorter switching times possible on request
  - the switching time depends on
    - Drive accessories (valves, piping, supply capacity)
    - Torque curve of the attached valve
    - Medium temperature of the valve
- Control medium
  - Dried compressed air; other control media only after consultation with AMG-Pesch.
  - Filter the control medium with a mesh size of at least 40 µm (ISO 8573-1, class 5).
  - ≤ 45°C
  - Appropriate measures must be taken for applications ≤ 0 ° C.
  - The dew point must be at least 10 ° C lower than the lowest operating temperature.
- Air connection (see also *section 7.5.1. Air supply*)
  - Standard
    - Size “05 G1 / 8”
    - Size “10-43 G1 / 4”
    - Size “43-50 G1 / 2”
  - other connections on request
- Weight
  - see "Technical data sheets"
- Service life
  - see *section 12. Maintenance / duration of use*.
- Installation position
  - Any, exhaust air openings provided with protection against foreign objects in open-air operation!!!
- Installation
  - Indoor / Outdoor

5.2. Nameplate

- Example

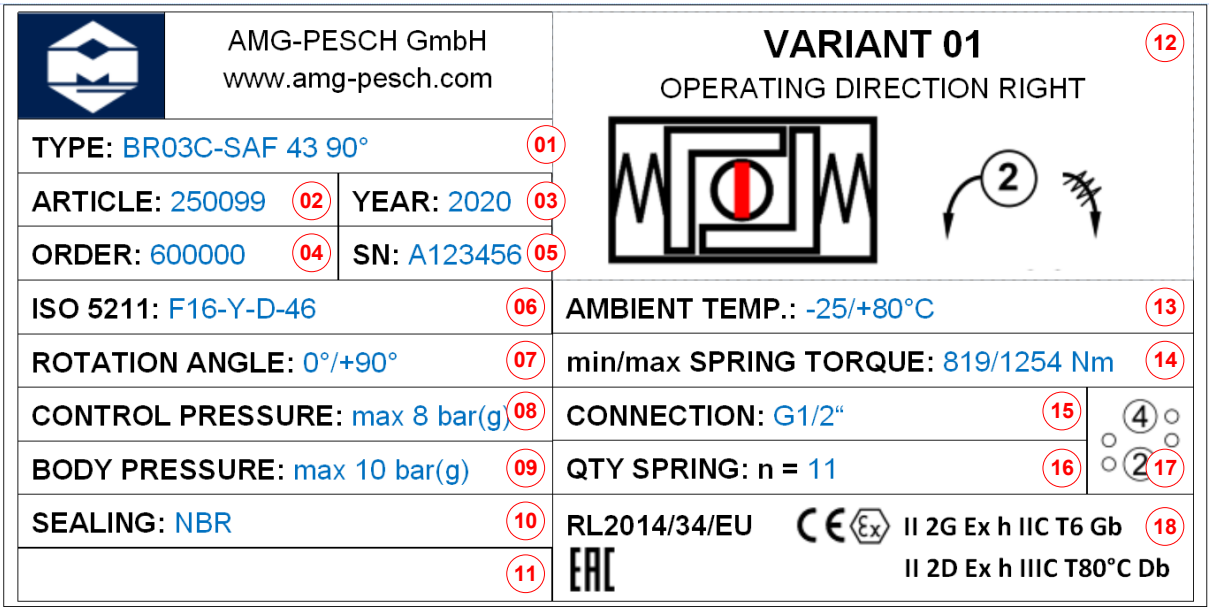

Pos	Designation	Comment
01	Type	Example: **BR03C – SAF 43 90°** **BR03C** = Series BR03 — replaced by BR16 BR03C — chemical design BR16 — standard BR02, BR04... — outdated series **SAF** = Type SAD — double-acting SAF — single-acting SAD-HP — double-acting HP *(high performance)* single-acting HP *(high performance)* SAF-HP SAD-HD — double-acting hydraulic damping SAF-HD — single-acting hydraulic damping SADT — double-acting tandem piston SADF — double-acting spring accumulator SAD-M — double-acting mechanical centre position SADF-M — double-acting spring-centred centre position DAD — dosing actuator double-acting DAF — dosing actuator single-acting **43** = Size 05, 10, 15, 20, 25, 30, 33, 35, 40, 42, 43, 45, 50 see also "technical data sheets" **90°** = Swing angle maximal 180°
02	Item-no.	Item-no. AMG-Pesch
03	Year of construction	Drive year of construction
04	Order-no.	Order-no AMG-Pesch

Pos	Designation	Comment
05	Serial no.	Serial-no. AMG-Pesch
06	Interface ISO 5211	Example: **F16-Y-D-46** F16 flange design Y with a lead (N = without a lead) D diagonal square 46 square dimensions in mm
07	Setting angle	Adjustment of rotation range of the drive
08	Max. permissible control pressure	Maximum permissible pneumatic control pressure in barg
09	Max. permissible housing pressure	Maximum permissible static pressure of the pressure-bearing components (housing, cover) in barg
10	Sealing material	Material installed O-rings
11	Additional information	Additional customer-specific information
12	Symbol representation	

Double acting	
VARIANT 01	VARIANT 01 OPERATING DIRECTION RIGHT 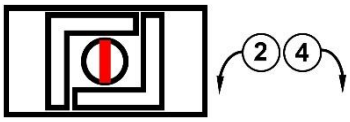
VARIANT 02	VARIANT 02 OPERATING DIRECTION RIGHT 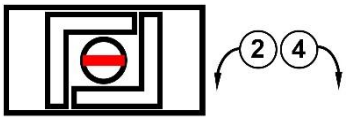
VARIANT 03	VARIANT 03 OPERATING DIRECTION LEFT 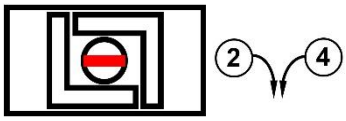
VARIANT 04	VARIANT 04 OPERATING DIRECTION LEFT

Pos	Designation	Remarks
12	Symbol representation	single-acting VARIANT 01: VARIANT 01 OPERATING DIRECTION RIGHT VARIANT 02: VARIANT 02 OPERATING DIRECTION RIGHT VARIANT 03: VARIANT 03 OPERATING DIRECTION LEFT 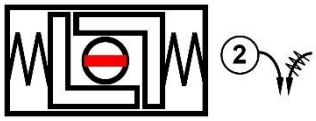 VARIANT 04: VARIANT 04 OPERATING DIRECTION LEFT 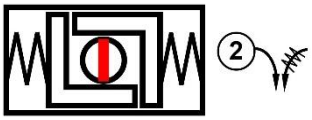
13	Ambient temperature	min. / Max. Ambient temperature in ° C Watch out! Max. Control medium temperature; see Section 5 - Technical Data
14	Spring moment	min. / max. spring torque -single acting actuators- [Nm]
15	Air connection	Specification of thread air connections
16	Number of springs	Number of built-in springs -single-acting actuators
17	Air connection drawing	"2" (inner chamber) and "4" (outer chamber)
18	ATEX 2014/34/EU EAC - marking	ACTUATOR IS ONLY DESIGNED WITH VISIBLE MARKING ACCORDING TO ATEX and EAC !!!

6. Marking DIR 2014/34/EU + EAC

- DIR 2014/34/EU

CE Ex **II 2G** / **II 2D** **Ex h** / **Ex h** **IIC** / **IIIC** **T6** / **T80°C** **Gb** / **Db**

Equipment protection level EPL
DIN EN IEC 60079-0 / DIN EN ISO 80079-36
- **Gb** = Gases/Steam
  → Occasionally occurs during normal operation
  → Zone 1
- **Db** = Dust
  → Occurs in the form of a cloud during normal operation
  → Zone 21

Temperature class
- **T6** = Gases/Steam
  → Ignition temperature> 85 ° C to ≤100 ° C
  → permissible surface temperature = 85 ° C
- **T80°C** = Dust
  → maximum surface temperature 80 ° C

Explosion group
- **IIC** = over days → gases / steam
- **IIIC** = over days → conductive dust

Type of ignition protection
DIN EN ISO 80079-37
- **Ex h** = design safety "c"
  → The drive is designed in such a way that it cannot become a source of ignition during normal operation and in the event of a malfunction.

Equipment group
- **II 2G** = over days
  → Equipment category 2 → Gases / steam
  → suitable for zone 1 and 2
- **II 2D** = over days
  → Equipment category 2 → dust
  → suitable for zone 21 and 22

- EAC
  - Certificate of conformity for the territory of the Eurasian Economic Union
  - Requirements according to TP TC 012/2011

6.1 Marking High-temperature-version

- DIR 2014/34/EU

CE Ex **II 2G** / **II 2D** **Ex h** / **Ex h** **IIC** / **IIIC** **T3** / **T200°C** **Gb** / **Db**

Equipment protection level EPL
DIN EN IEC 60079-0 / DIN EN ISO 80079-36
- **Gb** = Gases/Steam
  → Occasionally occurs during normal operation
  → Zone 1
- **Db** = Dust
  → Occurs in the form of a cloud during normal operation
  → Zone 21

Temperature class
- **T3** = Gases/Steam
  → Ignition temperature> 85 ° C to ≤200 ° C
  → permissible surface temperature = 200 ° C
- **T200°C** = Dust
  → maximum surface temperature 200 ° C

Explosion group
- **IIC** = over days → gases / steam
- **IIIC** = over days → conductive dust

Type of ignition protection
DIN EN ISO 80079-37
- **Ex h** = design safety "c"
  → The drive is designed in such a way that it cannot become a source of ignition during normal operation and in the event of a malfunction.

Equipment group
- **II 2G** = over days
  → Equipment category 2 → Gases / steam
  → suitable for zone 1 and 2
- **II 2D** = over days
  → Equipment category 2 → dust
  → suitable for zone 21 and 22

- EAC
  - Certificate of conformity for the territory of the Eurasian Economic Union
  - Requirements according to TP TC 012/2011

7. Design

7.1. General

- The drive is an essential component of an actuator (valve + drive + control valves ...).
- The drives are used to automate fittings (ball valve, flap, control flap ...).
- The transfer of a thrust to a rotary movement takes place via two opposing pistons with cast racks. The compressed air and the spring force act via the pistons on the pinion and thus initiate the rotary movement.
- The main difference to competing products is the use of additional guide rods (see *section 7.4. Exploded view / position 050*), which considerably increases the mechanical load capacity of the drives.
- The SAD / SAF drives have been type tested in accordance with DIN EN 15714-3.
- Swivel angle
  - The drives do not have adjustable end stops as standard
  - In terms of design, 90 ° drives allow the following angles of rotation as standard:

Drive size	05	10	15	20	25	30	33	35	40	42	43	45	50
Rotation angle [1)] [°]	91.7	92.3	92.4	92.4	91.8	92.4	92.7	93.4	93.4	91.2	91.5	91.5	91.6

[1)]averaged angle of rotation (from tolerance chain min./max.)

- The drives are tested according to protection class IP67 according to EN 60529.
- Single-acting actuators allow safe assembly / disassembly through the use of “tied up” and “pre-tensioned” safety spring assemblies (> size 10).
  - For size ≤ 10, safety is guaranteed by using "long" cover screws.

7.2. Type

- See also document QH-101dt_Variants-SAF_SAD

7.2.1. SAD/SAD-HP (double-acting)

- Description
  - Double-acting double-piston rotary actuator without internal reset function.
  - Double-acting actuators remain in the current position if the control pressure fails.

Safety function	**Torque curve**
The safety function lies in the requirement to assume the desired position of the drive in order to shut off or release a volume flow. This requires a corresponding control on the system side.	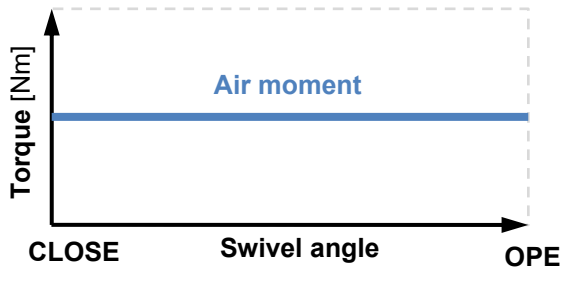

- VARIANT 01 **RIGHT**
  - When the inner chamber (connection 2) is ventilated, the switching shaft rotates counterclockwise (OPEN); when the outer chambers (connection 4) is ventilated, it rotates clockwise (CLOSED)..

OPEN **CLOSED**

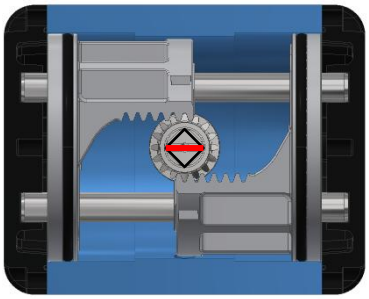

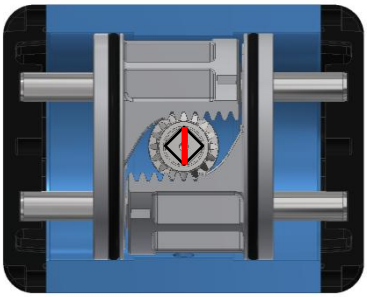

- VARIANT 02 **RIGHT TRANSVERSE STRUCTURE**
  - When the inner chamber (connection 2) is ventilated, the selector shaft rotates counterclockwise (OPEN), when the outer chambers (connection 4) are ventilated, it rotates clockwise (CLOSED).
  - Pinion rotated by 90° for actuators with transverse drive

OPEN **CLOSED**

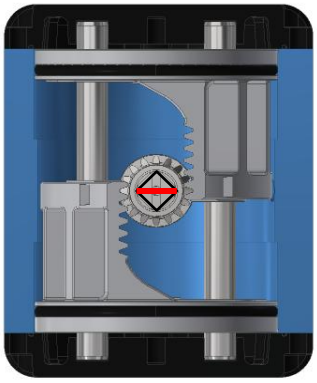

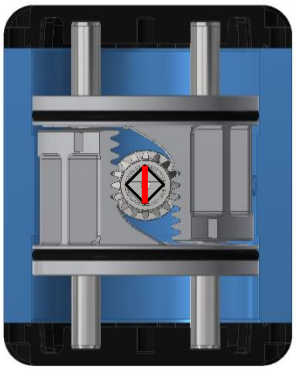

- VARIANT 03 **LEFT**
  - When the inner chamber (connection 2) is ventilated, the switching shaft rotates clockwise (OPEN); when the outer chambers (connection 4) are ventilated, it rotates counterclockwise (CLOSED).
  - Piston turned by 180° to reverse the direction of action

OPEN **CLOSED**

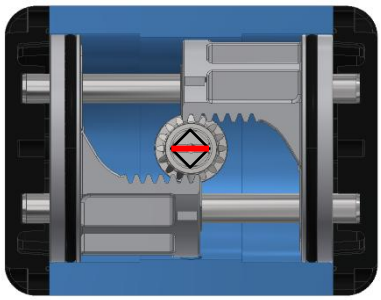

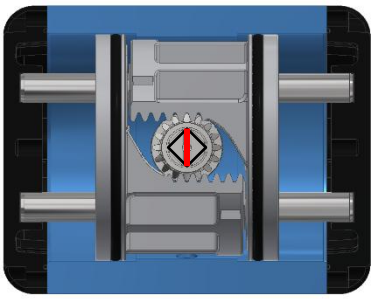

- VARIANT 04 **LEFT TRANSVERSE STRUCTURE**
  - When the inner chamber (connection 2) is ventilated, the switching shaft rotates clockwise (OPEN); when the outer chambers (connection 4) are ventilated, it rotates counterclockwise (CLOSED)..
  - Piston turned by 180° to reverse the direction of action
  - Pinion rotated by 90° for actuators with actuator transverse to the valve

OPEN

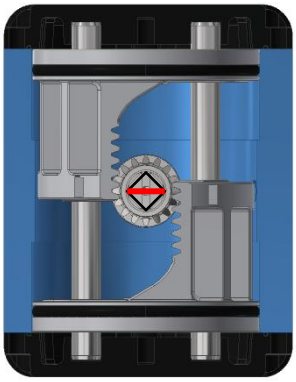

CLOSED

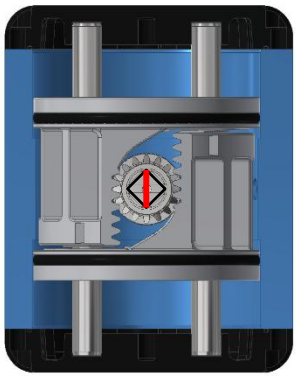

7.2.2. SAD/SAF-HP (High Performance)

- Description
  - Single-acting double piston rotary actuator with internal reset function by spring force.
  - In case of power failure, the actuator closes or opens the valve.

Safety function	**Torque diagram**
The safety function consists in the requirement to assume the rest position of the control valve. If the pneumatic and/or electrical supply is interrupted, the actuators are set to the "OPEN" (NO) or "CLOSED" (NC) state to shut off or release a flow	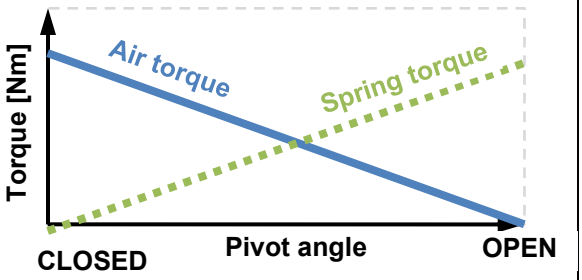

- VARIANT 01 **RIGHT**
  - When the inner chamber (connection 2) is ventilated, the selector shaft rotates counterclockwise (OPEN) and pretensions the springs. When the inner chamber (port 2) is vented or the control pressure fails, the tensioned springs turn the selector shaft clockwise (CLOSED).

OPEN

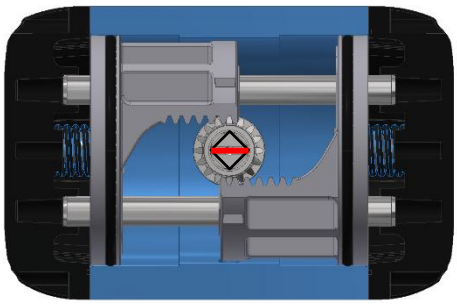

CLOSED

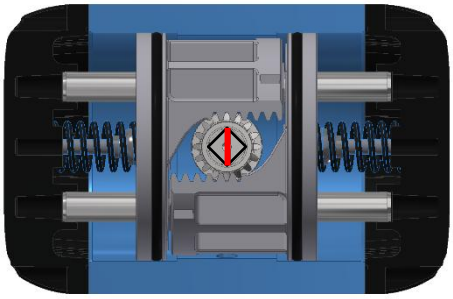

- VARIANT 02 **RIGHT TRANSVERSE STRUCTURE**
  - When the inner chamber (connection 2) is ventilated, the selector shaft rotates counterclockwise (OPEN) and pretensions the springs. When the inner chamber (port 2) is vented or the control pressure fails, the tensioned springs turn the selector shaft clockwise (CLOSED)
  - o Pinion rotated by 90° for actuators with transverse drive

OPEN

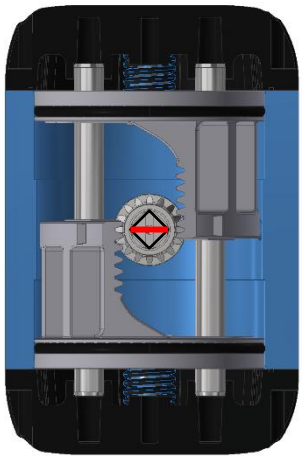

CLOSED

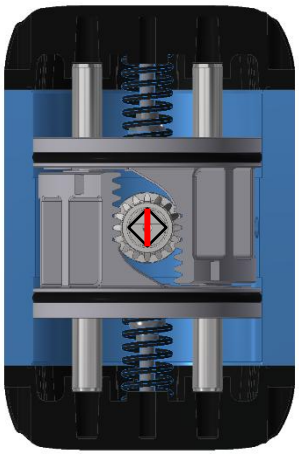

- VARIANT 03 **LEFT**
  - When the inner chamber (connection 2) is ventilated, the switching shaft rotates clockwise (OPEN) and pretensions the springs. When the inner chamber (port 2) is vented or the control pressure fails, the tensioned springs turn the selector shaft counterclockwise (CLOSED).
  - Piston turned by 180° to reverse the direction of action

OPEN **CLOSED**

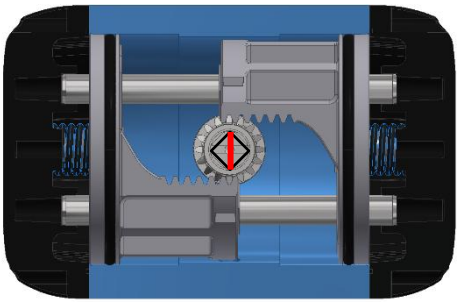

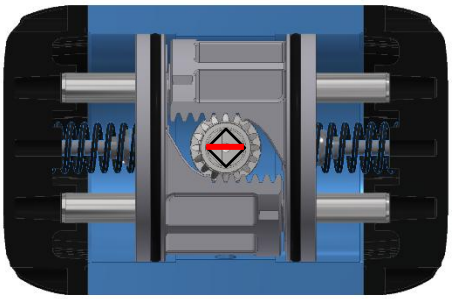

- VARIANT 04 **LEFT TRANSVERSE STRUCTURE**
  - When the inner chamber (connection 2) is ventilated, the switching shaft rotates clockwise (OPEN) and pretensions the springs. When the inner chamber (port 2) is vented or the control pressure fails, the tensioned springs turn the selector shaft counterclockwise (CLOSED).
  - Piston turned by 180° to reverse the direction of action
  - Pinion rotated by 90° for actuators with transverse drive

OPEN **CLOSED**

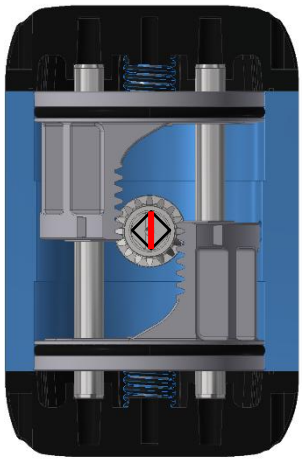

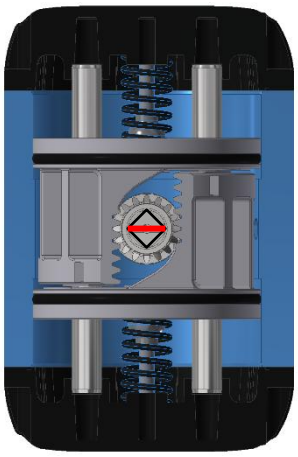

7.2.3. HP (High Performance)

- Difference between standard and high performance

Standard	High Performance
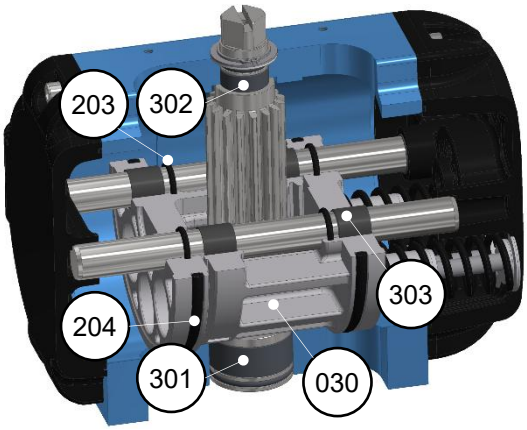	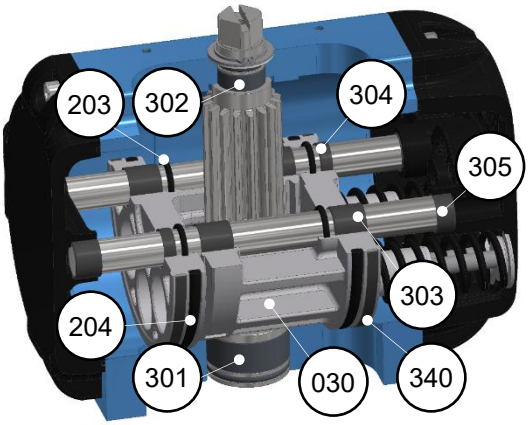
	• Additional guide bush (304) • Additional guide belts (340) ○ Piston blade stabilization ○ Wear protection O-ring
	• Additional guide bush (305) ○ Wear protection cover
• Pistons (030) ○ Aluminium	• Pistons (030) ○ Aluminium, hard-coated ○ Wear protection toothing
• O-rings dynamic (203,204) ○ NBR	• O-rings dynamic (203,204) ○ FKM (Viton®)
• Plain bearing, below (301) + Plain bearing, above (302) + Guide bushes (303) ○ Bearing material	• Plain bearing, below (301) + Plain bearing, above (302) + Guide bushes (303) ○ High performance material ○ Longer service life
• Lubrication ○ Standard grease	• Lubrication ○ High performance grease ○ Longer service life

7.3. Series

- Specification of the series see *section 5.2. Nameplate*
- Comparison see also *section 7.5.3. Interface valve*

	BR03 replaced by BR16	**BR03C** Chemical design	**BR16** Standard version
Pinion holder	Bi-square	diagonal square	Bi-square
Interface	one interface ISO 5211	one interface ISO 5211	Size 43-50 one interface ISO 5211
			Size <43 two interfaces ISO 5211
	Fixed centring ring ISO 5211	Fixed centring ring ISO 5211	additional interface stroke limiter module[1)]
			exchangeable centring ring ISO 5211

Circlip	X39CrMo17-1	X8CrNiMoAl15-7-2	X39CrMo17-1

1) see section 7.9. Stroke limitation

7.4. Exploded view

- Items marked in yellow differ between SAD / SAF and SAD-HP / SAF-HP

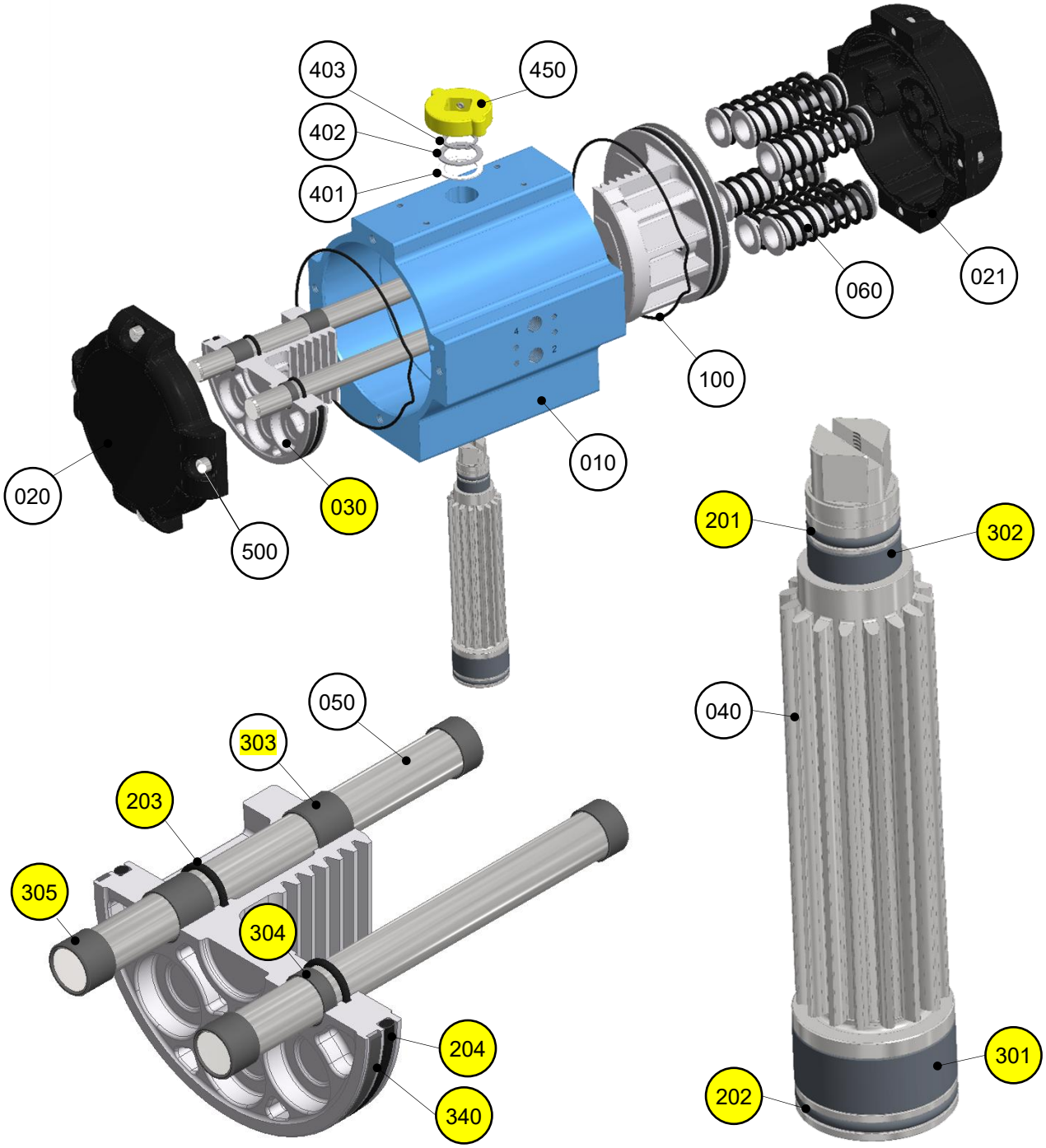

7.4.1. PARTS LIST / SPARE PARTS SAD / SAF

POS	QUANTITY SAD	QUANTITY SAF	DESIGNATION	MATERIAL	SP[2)]
10	1	1	Housing	Aluminium, anodized	
20	2		Flat cover	Aluminium, coated	
21		2	Spring cover	Aluminium, coated	
30	2	2	Pistons	Aluminium	
40	1	1	Pinion	Stainless steel	
50	2	2	Guide rod	Stainless steel	
60	4-14	4-14	Safety spring package	Stainless steel, coated	
100	4	4	O-ring static	NBR[1)]	X
201	1	1	O-Ring dynamic	NBR[1)]	X
202	1	1	O-Ring dynamic	NBR[1)]	X
203	4	1	O-Ring dynamic	NBR[1)]	X
204	2	1	O-ring dynamic	NBR[1)]	X
301	1	1	Plain bearing, below	Bearing material	
302	1	1	Plain bearing, above	Bearing material	
303	4	4	Guide bush	Bearing material	
401	1	1	Bearing washer	Bearing material	X
402	1	1	Spacer	Stainless steel	X
403	1	1	Circlip	Stainless steel	X
450	1	1	Position indicator	PVC	
500	8-12	8-12	Cover screws	Stainless steel	

1) Alternative elastomers on request
2) Spare parts

7.4.2. PARTS LIST / SPARE PARTS SAD-HP/SAF-HP

POS	QUANTITY SAD-HP	QUANTITY SAF-HP	DESIGNATION	MATERIAL	SP
10	1	1	Housing	Aluminium, anodized	
20	2		Flat cover	Aluminium, coated	
21		2	Spring cover	Aluminium, coated	
30	2	2	Pistons	Aluminium; **hard coated**	
40	1	1	Pinion	Stainless steel	
50	2	2	Guide rod	Stainless steel	
60	4-14	4-14	Safety spring package	Stainless steel, coated	
100	4	4	O-ring static	**Viton®**	X
201	1	1	O-ring dynamic	**Viton®**	X
202	1	1	O-ring dynamic	**Viton®**	X
203	4	1	O-ring dynamic	**Viton®**	X
204	2	1	O-ring dynamic	**Viton®**	X
301	1	1	Plain bearing, below	**High performance material**	
302	1	1	Plain bearing, above	**High performance material**	
303	4	4	Guide bush	**High performance material**	
304	1	1	Guide bush	**High performance material**	
305	4	4	Guide bush	**High performance material**	
340	1	1	Guide belt	Bearing material	
401	1	1	Bearing washer	Bearing material	X
402	1	1	Spacer	Stainless steel	X
403	1	1	Circlip	Stainless steel	X
450	1	1	Position indicator	PVC	
500	8-12	8-12	Cover screws	Stainless steel	

7.5. Interfaces / connections

7.5.1. Air supply

- AMG double-piston rotary actuators have the NAMUR interface as standard for direct flange-mounting of control valves in accordance with VDI / VDE 3845. The air connections are marked with "2" (inner chamber) and "4" (outer chamber).

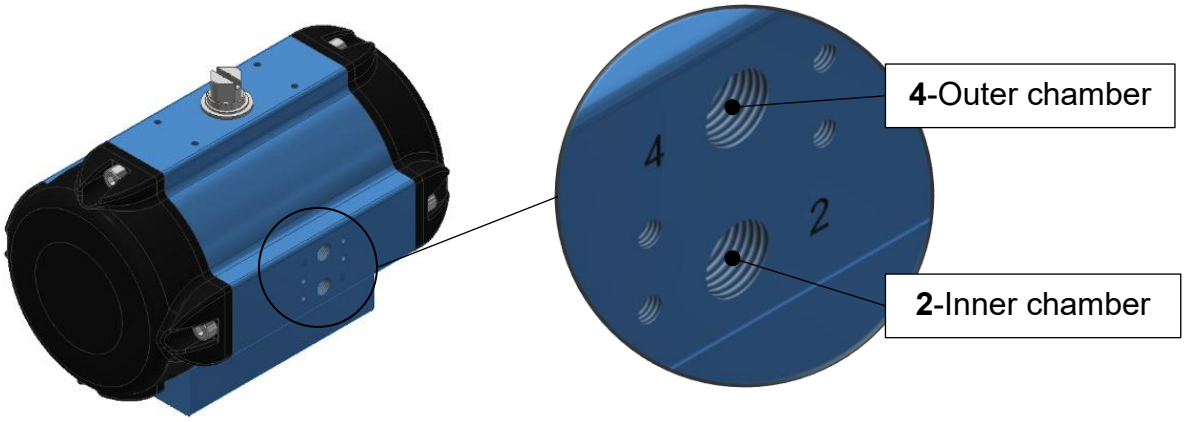

OPEN

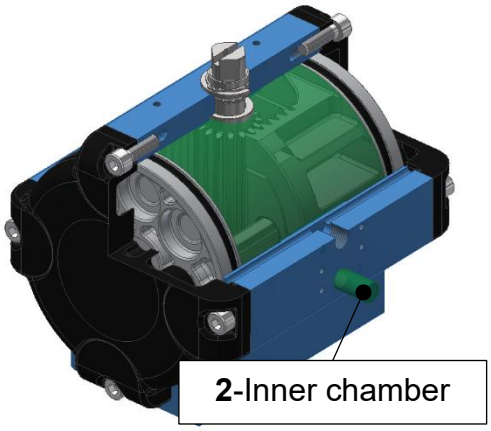

CLOSE

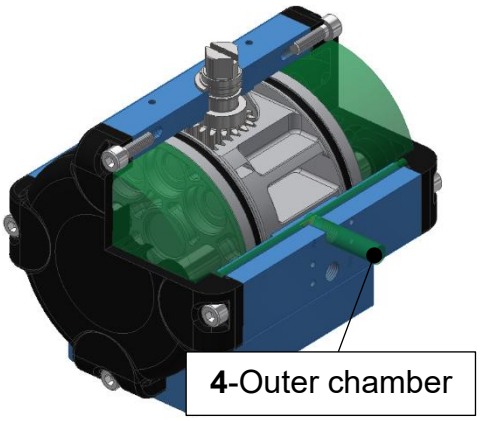

- The use of control valves with NAMUR connection is recommended
  - Using a coding pin (see VDI / VDE 3845-1, 3.2.2) ensures the prescribed position of the control valve.
- For connection dimensions, see also *section 5.1. Limits of use* and *technical data sheets*
- For recommended control see document QH-101dt_Variants-SAF_SAD

7.5.2. Interface positioner / signal devices

- AMG double-piston rotary actuators have a connection point as standard for attaching positioners and signalling devices in accordance with VDI / VDE 3845-1 mounting level 1.

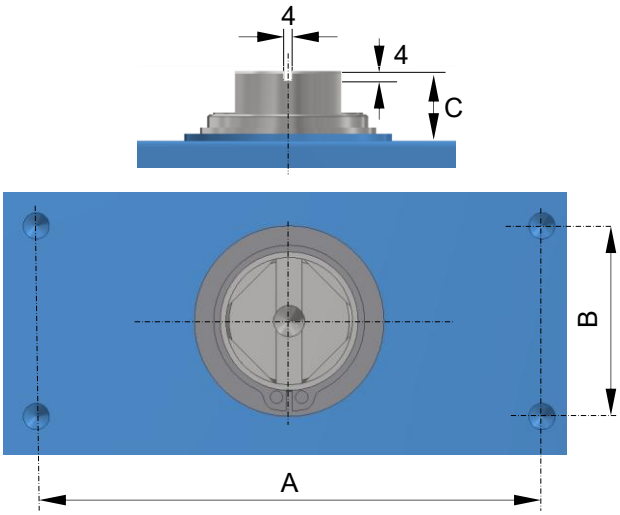

7.5.3. Interface valve

- connection acc. to DIN EN ISO 5211.
- Series
  - Connection dimensions, see technical data sheets

Series BR03C	
	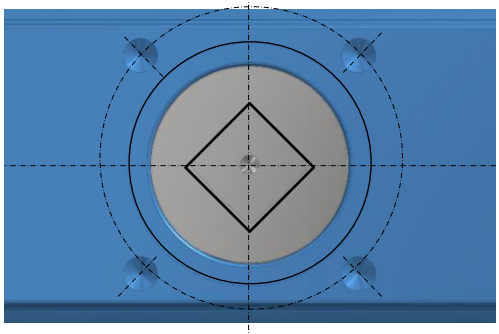
• Chemical design → Square mount	

Series BR16	
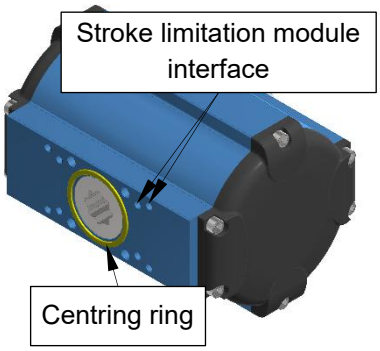	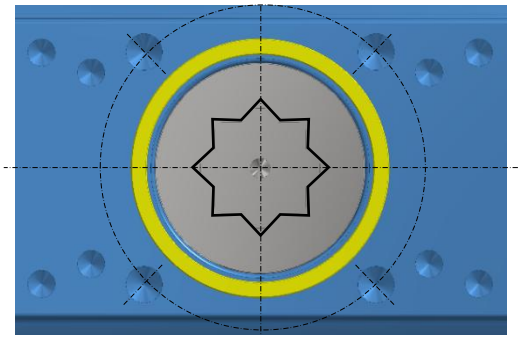
• Standard version →Octagonal mount • Centring ring optional • Double flange design according to ISO 5211 up to size 42	

- Connection option for AMG-PESCH stroke limiter module

7.6. Manual operation

- There is the option of installing an emergency manual gearbox between the drive and the valve. The valve interface is used for assembly (see 7.3.3). The manual emergency gear must meet the following requirements:
  - The manual actuation forces must comply with EN 12570.
  - The handwheel / hand lever must remain stationary when powered.
  - The current operation must be switched off before manual operation is initiated.
  - The closing / opening directions for manual operation must be clearly marked; the closing direction must be clockwise unless otherwise specified.

7.7. lubrication

- To protect the drives and to ensure that they function properly, we only recommend the use of original AMG Pesch lubricating greases.
- The following types of grease are used
  - Type SAD/SAF

Temperature range		Type of grease
Standard	-25°C / +80°C	AMG-Pesch standard grease
Low temperature	-40°C / +60°C	AMG-Pesch high-performance grease
High temperature	-25°C / +100°C (SPECIAL up to 160°C)	

  - Type SAD-HP/SAF-HP

Temperature range		Type of grease
Standard	-20°C / +100°C	AMG-Pesch high-performance grease

- Required amounts of grease

Size [1]	≤15	20	25	30	33	35	40	42	43	45	50
Quantity of grease [g]	25	30	35	50	60	70	80	100	180	240	280

[1] see *section 5.2. Nameplape*

[2] Values apply to 90° drives; for 180° drives multiply by factor 2

7.8. Stroke limitation

- Stroke limiting module
  - The BR16 series is equipped with an interface for the AMG Pesch stroke limiter module as standard.
  - The assembly takes place without a centring ring; see *section 7.6.3. Valve interface.*
  - The stroke limitation module is used to adjust the swivel angle of the drive.
  - For more information, see also **HBM dimension sheets**

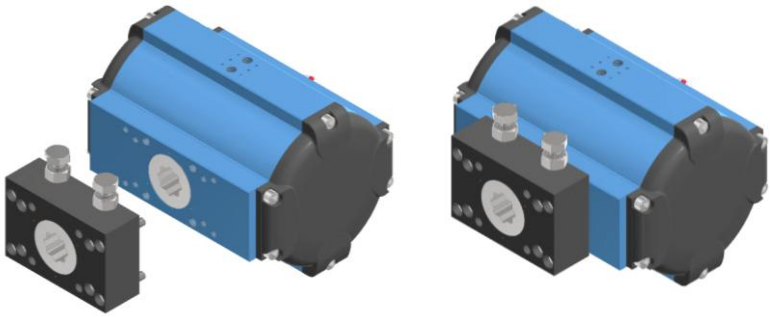

- External stroke limiter
  - Optionally, the drives can be equipped with an outer stroke limiter in the cover to set the outer end position.

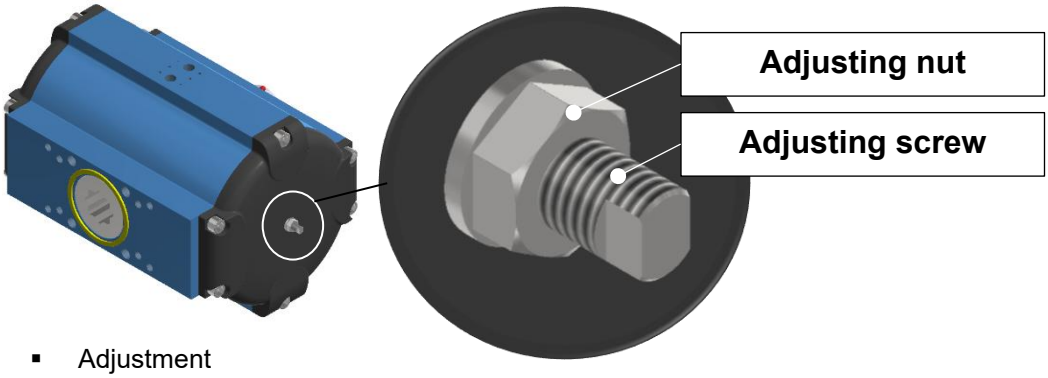

    - Adjustment
      - Vent the actuator
      - Loosen adjusting nuts
      - On any side, unscrew adjusting screw 1 counterclockwise until stop
      - Make the setting on the opposite side as follows
        - To reduce the swivel angle, turn adjusting screw 2 clockwise and secure with adjusting nut
        - To expand the swivel angle, turn adjusting screw 2 counterclockwise and secure with adjusting nut
      - Apply compressed air to inner chamber (2) and check swivel angle
      - Turn adjusting screw 2 carefully clockwise until stop and secure with adjusting nut
      - Control of the swivel angle by applying pressure in both directions

8. Storage

- Store the product in the original AMG PESCH packaging.
- Open connections must be closed.
- Standard storage conditions:
  - Dry
  - Covered
  - Ambient conditions -10 / + 40 ° C
  - Humidity <65%
  - Storage period: <6 months
- Only remove the original packaging shortly before installation (desiccants may be used depending on the delivery location).
- Storage of soft seals
  - Storage according to DIN 7716
  - Do not use after >5 years of storage
  - Seals must be stored stress-free
  - Storage temperature
    - non-vulcanized rubber seals = + 15 / + 25 ° C
    - rubber seals = -10 / + 25 ° C

- Humidity <65%
- Protection from sunlight, light with a UV component
- Storage in airtight packaging

9. Transport

- All additional documents from the valve manufacturer / drive manufacturer and all components included in the scope of delivery must be observed
- The centre of gravity and weight must be observed during transport
- Control air lines, valves and add-on parts of the drive are not permitted as suspensions; if necessary, these must be protected against damage during transport
- Handwheels and mounting parts of the valve are not permitted as suspensions; if necessary, these must be protected against damage during transport
- If the drive is equipped with transport screws / slings, these may **ONLY** be used to transport the drive
- All lifting devices and hoists must be approved and tested

Actuator (Drive + valve + attachments)	Actuator (Drive + valve)	Drive
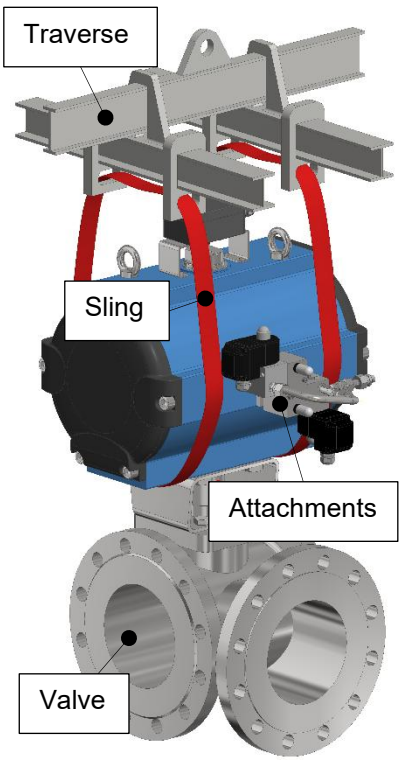	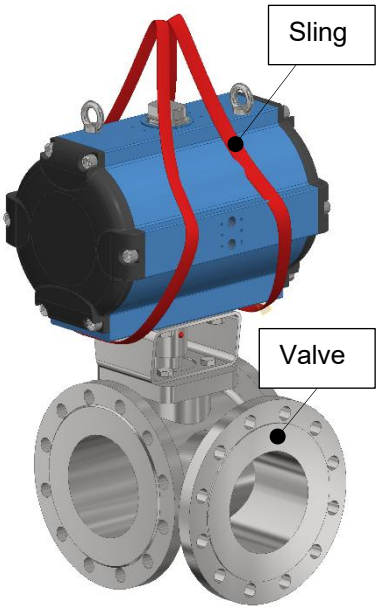	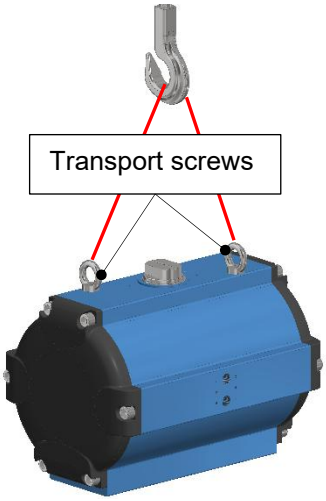

10. Assembly

10.1. General

- AMG drives are usually delivered complete with the necessary accessories, such as control valve and feedback unit. If this is not the case, the following instructions must be observed when attaching and assembling accessories and valves.
- All safety instructions and additional documentation must be observed.

10.2. Mounting positioner / signal devices

- See *section 7.5.2. Interface positioner / signal devices.*
- During installation, all additional documents for the attached positioner / signalling devices / feedback units must be observed.
- Structures

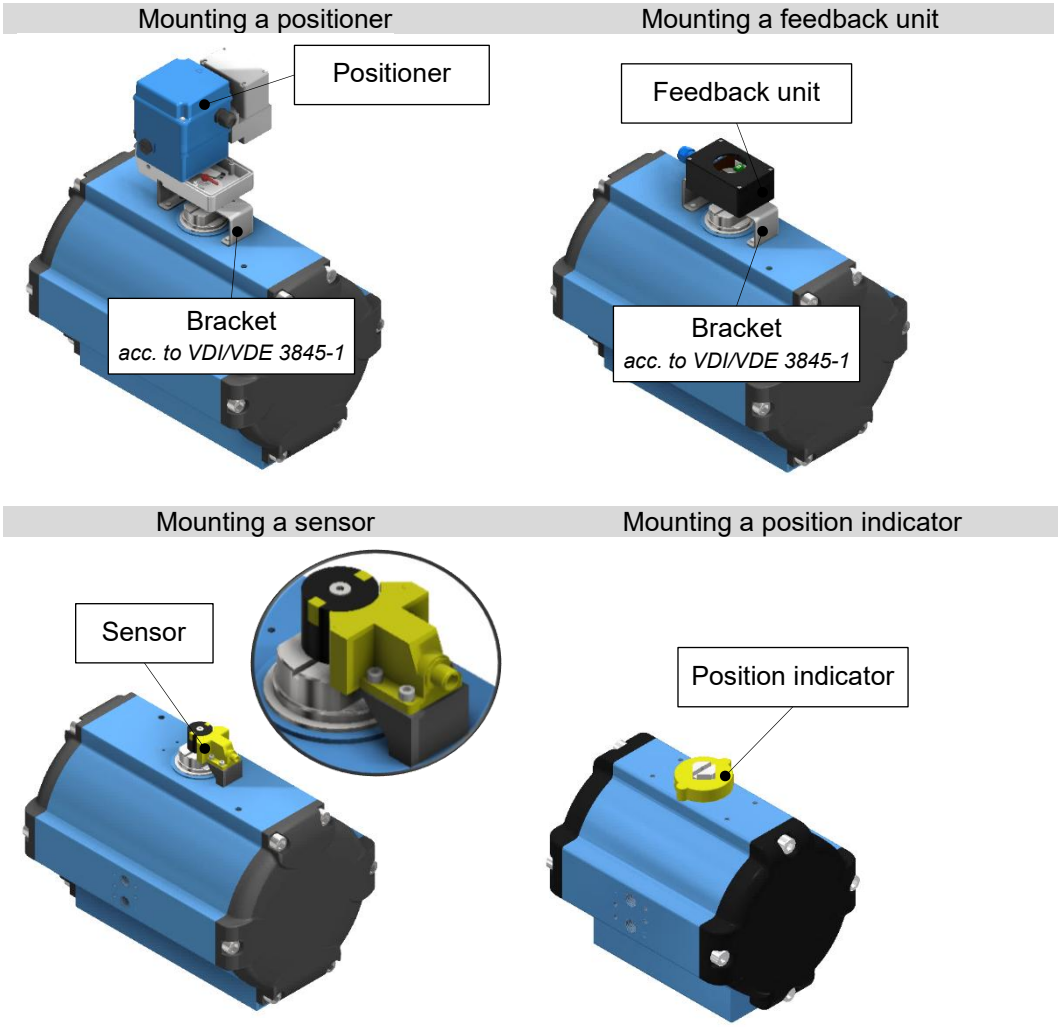

- The components / assemblies listed are available directly from AMG-Pesch

10.3. Mounting a valve

- The connection to valves is usually made using a bracket and adapter (coupling) in accordance with DIN EN 15081. The correct direction of rotation of the drive must be ensured. Non-standard structures have a negative influence on the functionality and service life of the actuator. The drive must be aligned in such a way that full passage of the valve or safe closing is guaranteed in the end positions.

10.4. Disassembly of drive

10.4.1. Type SAD/SAD-HP (double-acting)

- see *section 7.4. Exploded view*
  1. Dismantling of flat cover (020)
     - Remove cover screws (500) “crosswise”.
     - Carefully remove the flat cover (020) and O-ring (100).
  2. Dismantling of the piston (030)
     - Turning the pinion (040) on the outer square,
       clockwise (with standard version **RIGHT**),
       counterclockwise (with special version **LEFT**),
       until the piston (030) and guide rods (050) protrude from the housing (010).
     - Before removing, mark the piston installation position.
  3. Dismantling the pinion (040)
     - Remove the position indicator (450) by loosening the threaded pin.
     - Remove circlip (403), shim ring (402), bearing washer (401).
     - Carefully press the pinion (040) downwards out of the housing (010).

10.4.2. Type SAF/SAF-HP (single-acting)

- see section *7.2.4.Exploded view*
- Move drive to safety position before dismantling → piston in CLOSED position,
  see *section 7.2.2. SAF / SAF-HP (single-acting)*
  1. Dismantling of the spring cover (021)
     - Carefully loosen the cover screws (500) “crosswise” until there is no more pre-tension of the safety spring assemblies (060).
     - Remove cover screws (500) “crosswise”.
     - Carefully remove the spring cover (021), O-ring (100) and safety spring packages (060).
     - Note
       - For size ≤ 10 no safety spring packages are installed, drives are equipped with "unbound" springs. (Safety is guaranteed by using "long" cover screws)
  2. Dismantling of the piston (030)
     - Turning the pinion (040) on the outer square,
       clockwise (with standard version **RIGHT**),
       counterclockwise (with special version **LEFT**),
       until the piston (030) and guide rods (050) protrude from the housing (010).
     - Before removing, mark the piston installation position.
  3. Dismantling the pinion (040)
     - Remove the position indicator (450) by loosening the threaded pin.
     - Remove circlip (403), shim ring (402), bearing washer (401).

10.5. Assembly of drive

10.5.1. Type SAD/SAD-HP (double-acting)

- see *section 7.4. Exploded view.*
- The bearing points, the running surface in the housing, all built-in parts, sealing elements and the teeth must be greased before assembly. (For quantity, see *section 7.7. Lubrication*)

1. pre-assembly pinion (040)
   - Carefully press the pinion (040) with O-rings (201,202) and plain bearings (301,302) into the housing (010) from below.
2. Mounting the piston (030)
   - Equip piston (030) with O-rings (203,204), guide bush (303,304) and guide band (340).
     - Note: Guide bush (304) + guide band (340) only with HP version
   - Carefully push the guide rods (050) into the piston (030) as shown.

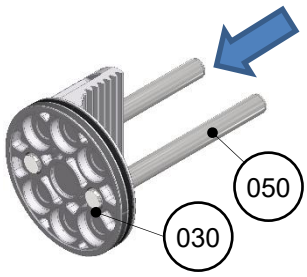

   - Mount piston (030) and guide rods (050) in the housing (010) as shown. (Note the installation position; see 7.2.2 and 7.2.3)
   - Push the piston (030) together until the piston is flush with the housing.

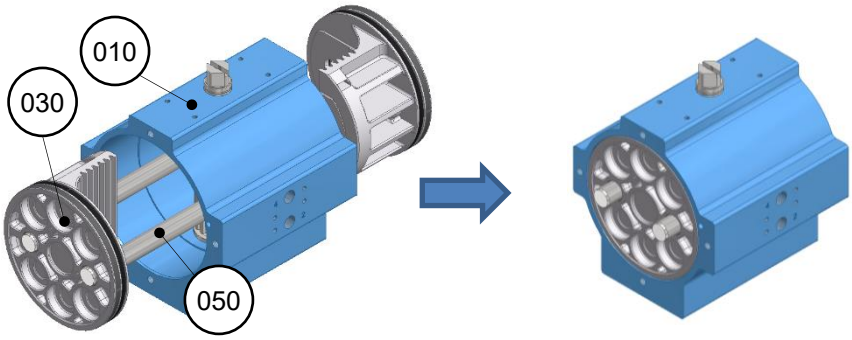

   - Turn the pinion (040) on the outer square, clockwise (standard version **RIGHT**), counterclockwise (special version **LEFT**) until the piston hits the inside.

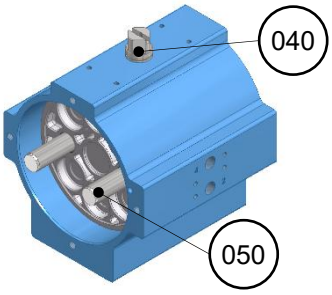

- Check the pinion position (040) with the piston retracted;
  see also document QH-101dt_Varianten-SAD_SAD.

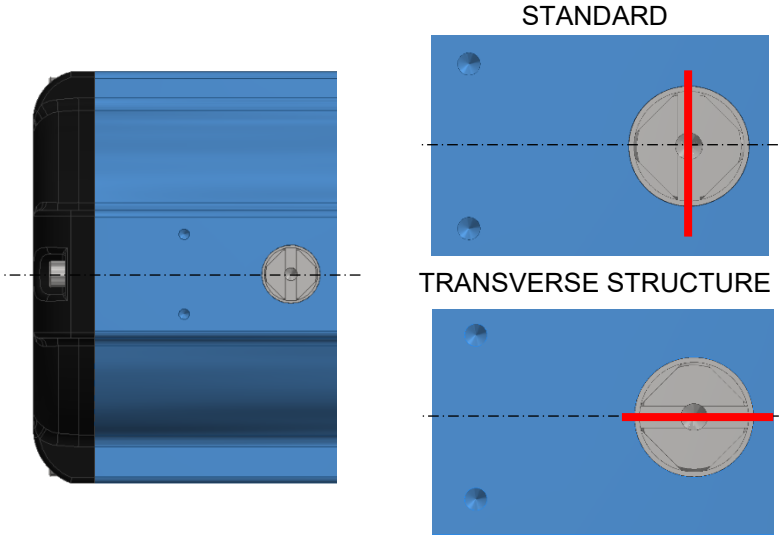

→ If the pinion position is not exact!!! → Dismantle the pinion and reinsert it.

3. Assembly of the flat cover (020)
   - Arrange guide rods (050)
   - Insert the O-ring (100) in the groove of the flat cover (020)
   - For HP version, additionally insert guide bushes (305) in cover

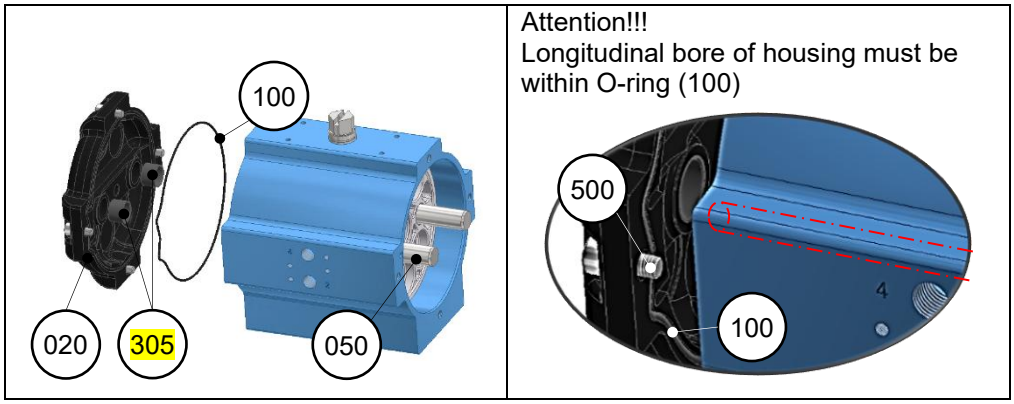

   - Tighten cover screws (500) "crosswise"
     - Tightening torques

	Size [1]						
	10	15-20	25	30-35	40-43	45	50
Tightening torque [Nm]	4	7	17	35	60	145	290

[1] see 2. Marking

4. Final assembly
   - Mount bearing disk (401), shim disk (402) as shown in *section 7.4. Exploded view* and secure with circlip (403).

10.5.2. Type SAF/SAF-HP (single-acting)

- see *section 7.4. Exploded view.*
- Bearing points, running surfaces in the housing, all installation parts, sealing elements, spring assemblies, toothing must be greased before assembly. (For quantity, see *section 7.8. Lubrication*)

1. pre-assembly pinion (040)
   - see 10.5.1 Type SAD/SAD-HP
2. Mounting the piston (030)
   - see 10.5.1 Type SAD/SAD-HP
3. Mount spring cover (021) / safety spring assemblies (060)
   - Arrange guide rods (050)
   - Insert O-ring (100) into the groove of the spring covers (021)
   - For HP version, additionally insert guide bushes (305) in cover

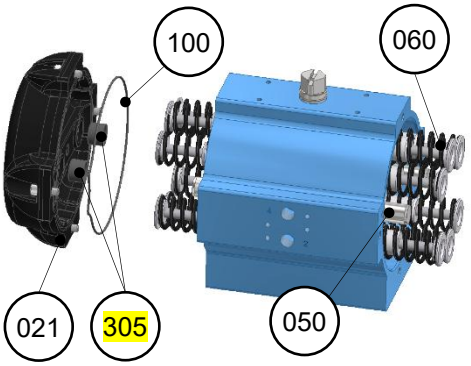

Attention!!!
Longitudinal bore of housing must be within O-ring (100)

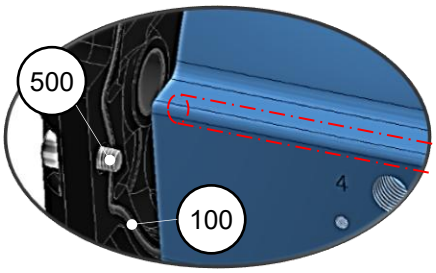

   - Number of safety spring assemblies (060), see section 6. Marking
   - Insert the safety spring assemblies (060) into the pockets provided in the piston (030)

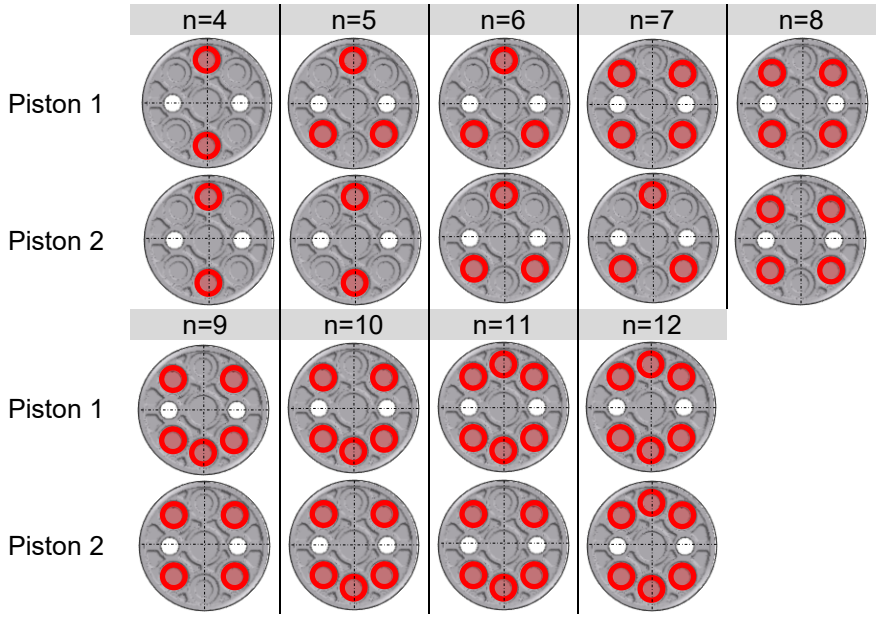

- Tighten cover screws (500) "crosswise"; carry out this work completely on one cover side at a time.
  - Tightening torques

Size [1)]	10	15-20	25	30-35	40-43	45	50
Tightening torque [Nm]	4	7	17	35	60	145	290

[1)] see 2. Marking

4. Final assembly
   - Mount bearing disk (401), shim disk (402) as shown in 8.1.4 and secure with circlip (403).

11. Commissioning

11.1. General tightening torque [Nm]

- Commissioning may only be carried out by qualified fitters; we recommend the assistance of one of our experienced specialist fitters
- All safety instructions and additional documentation must be observed
- Check all main connections
- Check all additionally required connections
  - Electrical connections
  - Pneumatic/hydraulic connections/supply units/control units
  - Check the "grounding" of the piping system to avoid electrostatic charge
- Checking the drive function
  - Check the correct end positions by operating the drive; if necessary, check the connected valves
  - Check the limit switch signals in the specified switch positions
  - Check the specified position when using a positioner
- For actuators
  - Check the correct installation in the pipeline
  - Check the specified drive function
  - Pressure tests, functional tests according to documentation of valve manufacturer
  - Safety instructions of all attached components must be observed

12. Maintenance / service life

- Minimum durability
  - The drives are lubricated for life, the minimum number of switching cycles[1)] is according to DIN EN 15714-3; see also *technical data sheets*.

Size	Nominal torque [Nm]	Flange design (ISO 5211)	Switching cycles (DIN EN 15714-3)
05-15	≤ 125	≥ F05	500000
20-35	≤ 1000	≥ F12	500000
40	≤ 2000	≥ F14	250000
42-50	≤ 8000	≥ F25	100000
-	≤ 32000	≥ F35	25000

[1)] 1 switching cycle = drive 1 x opened + 1 x closed

  - The values are based on a load of at least 60% of the load torque at 5.5 bar control pressure and the test procedure described in DIN EN 15714-3 Appendix A

- Requirement
  - Professional assembly of the drives
  - Compliance with the intended use
  - Compliance with the technical data

- Use in safety-oriented system
  - Experience shows that the service life is 10-15 years if the instructions are followed.
  - Maintenance must be carried out after 50,000 switching cycles or after max. 5 years.
  - The responsibility lies with the operator of the "safety-related" system.
  - See also *section 13. SIS (Safety Instrumented System)*.

- Maintenance procedure
  - Attention!!! Safety instructions must be observed.
  - Check
    - Function at minimum control pressure on site; technical data sheets
    - leak test (e.g. with leakage spray)
      - → Check tightness at pinion top / bottom
      - → Check tightness between cover and housing
  - **In case of leakage, remove drive**
  - For dismantling, *see section 10.4. Dismantling the drive*.
    - Cleaning
    - Check and, if necessary, replace parts
  - For assembly *see section 10.5. Assembling the actuator*
  - Smooth running test
    - → for double-acting actuators SAD with test pressure pT=0.3bar
    - → for single-acting actuators SAF depending on the number of springs n

n	4	5	6	7	8	9	10
p_T [bar]	0,8-1,4	1,1-1,7	1,3-2,1	1,6-24	1,8-2,8	2,0-3,1	2,2-3,5
n	11	12	13	14			
p_T [bar]	2,5-3,8	2,7-4,2	2,9-4,5	3,1-4,9			

    - Angular Position
    - Leak test (if necessary consult AMG-Pesch)
      - → Apply compressed air to inner chamber (2) and check tightness at pinion top/bottom. Connect outer chamber (4) with hose and immerse open hose end in water bath and check for leaks.
      - → Change connections (compressed air=4 hose=2), apply compressed air to outer chamber (on the lid side). Check tightness between cover and housing. Immerse open hose end in water bath and check tightness.

13. SIS (**S**afety **I**nstrumented **S**ystem)

- Approval according to SIL **only** applies to SAD/SAF with swivel range up to 90°!!!!

13.1. Terms and abbreviations

	GERMAN	ENGLISH
SIL	Sicherheits-Integritätslevel	**S**afety **I**ntegrity **L**evel
SIS	Sicherheitsgerichtetes System	**S**afety **I**nstrumented **S**ystem
FMEDA	Betrachtung Anteil ungefährlicher Ausfälle und Diagnosedeckungsgrad	**F**ailure **M**odes, **E**ffects and **D**iagnostic **A**nalysis
HFT	Hardware-Fehlertoleranz	**H**ardware **F**ault **T**olerance
PFD_{avg}	Mittlere Wahrscheinlichkeit eines gefährlichen Ausfalls bei Anforderung	Average **P**robability of dangerous **F**ailure on **D**emand
λ_D	Ausfallrate gefährliche Fehler	
PSTC	Abdeckung Teilhubtest	**P**artial **S**troke **T**est **C**overage
PTC	Prozentsatz zufälliger, gefährlicher, unentdeckter Fehler	**P**roof **T**est **C**overage
MTC		**M**aintenance **C**overage
PST		**P**artial **S**troke **T**est
FST		**F**ull **S**troke **T**est

13.2. Reference documents

- TÜV Certificate No.:968/V 1097.00/19
- FMEDA
- QF-084_6- Declaration of conformity for drives
- DIN EN 61508-1: Functional safety of safety-related electrical/electronic/programmable electronic systems - Part 1: General requirements
- DIN EN 61508-2: Functional safety of safety-related electrical/electronic/programmable electronic systems - Part 2: Requirements for safety-related electrical/electronic/programmable electronic systems
- DIN EN 61511-1: Functional safety - PCT safety devices for process industries - Part 1: General, terminology, requirements for systems, hardware and application programming
- DIN EN 61511-2: Functional safety - PCT safety devices for process industries - Part 2: Instructions for use of IEC 61511-1
- DIN EN 61511-3: Functional safety - PCT safety devices for process industries - Part 3: Guidance for determining the required safety integrity levels
- DIN EN 15714-3: Industrial valves - Drives - Part 3: Pneumatic quarter-turn actuators for industrial valves - Basic requirements
- DIN EN ISO 5211: Industrial valves - Connections of rotary actuators
- DIN EN 15081: Industrial valves - Mounting kits for connection of rotary actuators to valves
- VDI/VDE 3845: Actuators for flowing substances - Pneumatic drives - Connection points between actuator and actuator accessories

13.3. Safety function

- The safety function consists of taking up the desired position of the drive on demand in order to shut off or release a volume flow accordingly.
- see *section 7.2.1. SAD/SAD-HP (double-acting)*
- see *section 7.2.2. SAF / SAF-HP (single-acting)*

13.4. Application limits

- With a safety-related function SIF, it must be ensured that the product is suitable for use within the expected application limits. The compatibility of the operating medium with the materials used must be agreed with the manufacturer for use in safety-related applications.
- Type designation
  - SAD (double-acting)
  - SAF (single-acting)
- Ambient temperature
  - -25°C / +80°C
- Temperature control medium
  - ≤ 45°C
- See also *section 5.Technical data*

13.5. Verification

- For the evaluation of possible failure types within the SIF and their classification into safe and dangerous failures, a failure mode and effect analysis has been carried out for the product.
- The suitability of the SIF has been proven by positive results of a type examination / endurance test and sufficient field experience.

13.6. SIL suitability

- The product is suitable for use in a safety-related system according to IEC 61508 up to SIL 2. Taking into account the minimum required hardware fault tolerance of HFT = 1, the product can also be used in redundant design up to SIL 3 (see test report). The achieved safety integrity level (SIL) of the entire safety chain must be verified by calculating the PFD_{avg} value, taking into account the architecture, the test intervals as well as its effectiveness, the respective automatic diagnostic devices, the average repair times and the specific failure rates of all products integrated in the safety chain.

13.7. FMEDA

- Verification of failure rates
  - Failure rates at component level in low demand mode
    - Safety functions
      - Closing/opening on demand by compressed air supply
      - Closing/opening on demand by spring force in case of failure of compressed air and/or power supply

	SAD	SAF
Failure rate λ_D	2.74 E-07/h	1.85 E-07/h

  - Average probability of a dangerous failure PFD_{avg}

	SAD	SAF
$PFD_{avg,1001}$	1.20 E-03 ≙ 12% SIL 2	8.10 E-04 ≙ 8% SIL 2
$PFD_{avg,1002}$	1.22 E-04 ≙ 12% SIL 3	8.18 E-05 ≙ 8% SIL 3

→ single channel up to SIL 2
→ multi-channel up to SIL 3

- Safety functions

	SAD	SAF
PSTC	46%	92%
PTC	83%	99%
MTC	>99%	>99%

13.8. Test interval

- The function test in the field must be carried out once a year. Possible function tests:
  - Partial Stroke Test (PST)

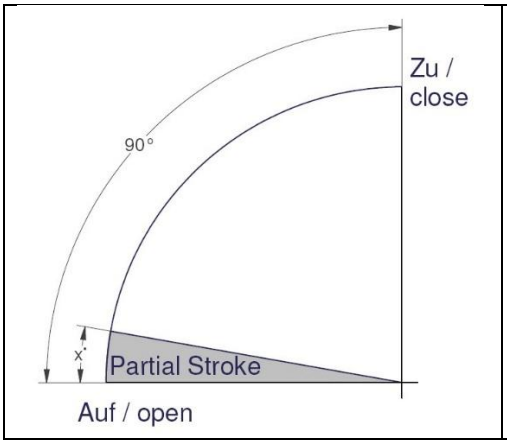

The Partial Stroke Test (PST) is a partial stroke X for testing the start-up behaviour of actuators without significantly influencing the plant process. The safety-related design is a prerequisite for the test, i.e. the maximum air torque must not deform the switching shaft of the valve. This is the only way to ensure that the drive also moves the valve. The application limits of the valves and drives must be observed.

  - Full Stroke Test (FST)
    - A switching cycle is performed (1 x open + 1 x close)
- Redundant safety systems can be tested by bypass switching without disturbing the plant process.
- Non-redundant safety systems can be checked by partial stroke systems
  - Electronically controlled partial stroke solutions (positioner)
  - Pneumatically controlled partial stroke solutions (AMG actuator)
  - Mechanical partial stroke solutions (manual or automated)

14. Faults

14.1. Contact

- AMG-Pesch GmbH
  Adam-Riese-Straße 1
  50996 Cologne
  Germany
  Telephone: +49 (0) 22 36 - 89 16 – 0
  Fax: +49 (0) 22 36 - 89 16 – 56
  Email: info@amg-pesch.com

14.2. Analysis

Faults	Measure	Remark
Drive does not respond to control signal	▪ Check control pressure ○ At least the control pressure according to design is required ▪ Check drive for stiffness ▪ Check control ○ Checking the cabling	 Follow safety instructions In case of queries, please have the data on the nameplate ready
Solenoid valve does not switch	▪ Check control coil ○ Check specified control voltage ○ Observe valve documentation	
Valve switches too quickly	▪ Provide throttle valve depending on requirements	
Leakage to the outside Increased consumption of control air in limit positions	▪ Check control valve ○ Seal between drive and valve defective ▪ Check connections between housing/cover and pinion seal for leaks; see *section 7.4. Exploded view* ▪ Carry out leak test on the drive → Check drive according to *section 12. Maintenance*	
Malfunction due to switching angle adjustment	▪ Check interface between drive and valve ○ Readjust if necessary and retighten screws	

15. Disposal

15.1. General Information

At the end of their service life, the products must be properly dismantled and disposed of in accordance with applicable national and regional regulations.

Before disassembly, disconnect all power sources:

- Depressurize the pneumatic supply
- Disconnect the power supply
- Remove attachments and additional components
- Completely remove any remaining fluids

Disposal may only be performed by qualified personnel.

15.2. Separation of Materials

After disassembly, the individual components of the drive system must be sorted by material type and disposed of or recycled in accordance with applicable national and regional regulations.

The following material groups should be given special consideration:

- Metals (e.g., aluminium, stainless steel, spring steel)
- Plastics
- Elastomers (Seals)
- Lubricants and Other Operating Supplies
- Antifreeze Fluids for Special Versions
- Electrical and electronic components (if available)

15.3. Separation of Materials

Special models may be filled with an antifreeze fluid (TTC Protect C11 or W 505).

Before performing maintenance, disassembly, or disposal work, the antifreeze must be completely drained and collected in suitable containers.

The antifreeze must not

- enter the sewer system
- enter bodies of water or
- enter the ground

Disposal must be carried out in accordance with the information provided in the currently valid safety data sheet for the antifreeze used, as well as applicable legal regulations. Classification and disposal are to be carried out in accordance with the Waste Catalogue Regulation (AVV).

Contaminated binders, cleaning cloths, or other materials contaminated with antifreeze must also be disposed of in accordance with applicable regulations.